# INSTRUCTION MANUAL

GREENLEE®

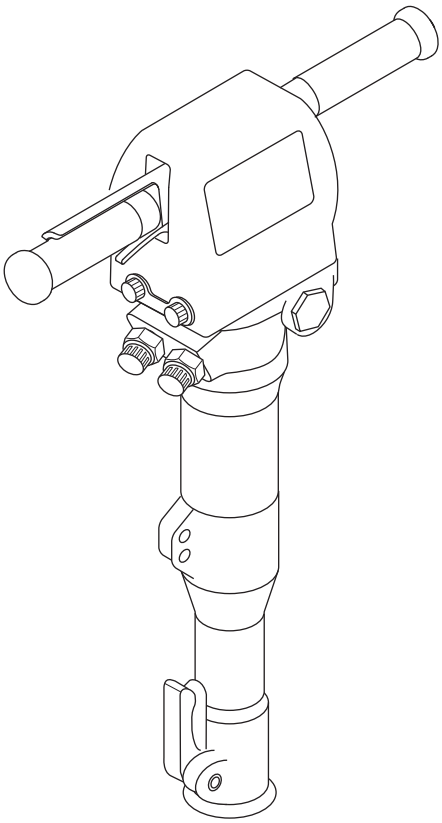

# HPB45 Series Hydraulic Paving Breaker

**Serial Codes GMN and GMP**

**Read** and **understand** all of the instructions and safety information in this manual before operating or servicing this tool.

**Register this product at www.greenlee.com**

52033853 REV 4

10/19

## Table of Contents



## Description

The HPB45 Series Greenlee Paving Breaker is intended to break up asphalt, concrete, and hard clay.

Accessories available from Greenlee allow the HPB45 to drive ground rods.

The HPB45 breaker is provided with vibration-dampened handles.

## Safety

Safety is essential in the use and maintenance of Greenlee tools and equipment. This manual and any markings on the tool provide information for avoiding hazards and unsafe practices related to the use of this tool. Observe all of the safety information provided.

## Purpose of this Manual

This manual is intended to familiarize personnel with the safe operation and maintenance procedures for the following Greenlee Paving Breakers:

- HPB45-1AVS 1-1/8" x 6" shank with dampening handles
- HPB45-2AVS 1" x 4-1/4" shank with dampening handles

Keep this manual available to all personnel.

Replacement manuals are available upon request at no charge at www.greenlee.com.

## Other Publications

**Tool Owners/Users**

SAE Standard J1273 (Hose and Hose Assemblies): Publication 99930323

**Authorized Greenlee Service Centers**

Service Manual: Publication 52042951

All specifications are nominal and may change as design improvements occur. Greenlee Tools, Inc. shall not be liable for damages resulting from misapplication or misuse of its products.

***KEEP THIS MANUAL***

# IMPORTANT SAFETY INFORMATION

## SAFETY ALERT SYMBOL

This symbol is used to call your attention to hazards or unsafe practices which could result in an injury or property damage. The signal word, defined below, indicates the severity of the hazard. The message after the signal word provides information for preventing or avoiding the hazard.

**⚠DANGER**

Immediate hazards which, if not avoided, WILL result in severe injury or death.

**⚠WARNING**

Hazards which, if not avoided, COULD result in severe injury or death.

**⚠CAUTION**

Hazards or unsafe practices which, if not avoided, MAY result in injury or property damage.

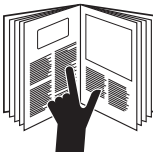

**⚠WARNING**

Read and understand all of the instructions and safety information in this manual before operating or servicing this tool.

Failure to observe this warning could result in severe injury or death.

**⚠WARNING**

Skin injection hazard:

- Do not use hands to check for leaks.
- Do not hold hose or couplers while the hydraulic system is pressurized.
- Depressurize the hydraulic system before servicing.

Oil under pressure easily punctures skin causing serious injury, gangrene or death. If you are injured by escaping oil, seek medical attention immediately.

**⚠WARNING**

Do not exceed the following hydraulic power source maximums:

- Hydraulic flow: 30 l/min (8 gpm)
- Pressure relief: 160 bar (2300 psi)
- Back pressure: 28 bar (405 psi)

Failure to observe this warning could result in severe injury or death.

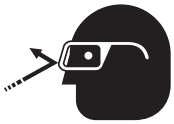

**⚠WARNING**

Wear eye protection when operating or servicing this tool.

Failure to wear eye protection could result in serious eye injury from flying debris or hydraulic oil.

**⚠WARNING**

Wear hearing protection when using this tool.

Failure to observe this warning could result in serious injury.

**⚠WARNING**

Wear foot protection when using this tool.

Failure to observe this warning could result in serious injury.

# IMPORTANT SAFETY INFORMATION

**⚠WARNING**

Tool, bit, and other components may be hot during and after operation. Allow to cool before handling, or handle with heat-resistant gloves.

Failure to observe this warning could result in severe injury.

**⚠WARNING**

Do not disconnect tool, hoses or fittings while the power source is running or if the hydraulic fluid is hot. Hot hydraulic fluid can cause serious burns.

**⚠WARNING**

Do not reverse hydraulic flow. Operation with hydraulic flow reversed can cause tool malfunction. Connect the supply (pressure) hose and return (tank) hose to the proper ports.

Failure to observe this warning could result in severe injury or death.

**⚠WARNING**

Do not change accessories, inspect, adjust or clean tool when it is connected to a power source. Accidental startup can result in serious injury.

Failure to observe these warnings could result in severe injury or death.

**⚠WARNING**

Serious injury can result if the operator does not maintain control of the tool.

- Wear slip-proof gloves when operating this tool.
- Maintain a firm grip on the tool, using both hands at all times.
- Do not lock the trigger in the power-ON position. Operator cannot stop tool when the trigger is locked.

Failure to observe these warnings could result in severe injury or death.

**⚠WARNING**

Accumulator is charged with nitrogen under high pressure. This pressure must be unloaded before dismounting.

Failure to observe this warning could result in severe injury or death.

**⚠CAUTION**

Vibration hazard:

Apply just enough pressure to do the work. Applying excess pressure to the breaker can cause operator discomfort or temporary numbness.

Failure to observe this precaution may result in injury.

# IMPORTANT SAFETY INFORMATION

## ⚠CAUTION

- Do not operate the breaker unless the bit is properly installed and placed against the work surface. Damage to the breaker can result.
- Inspect the hydraulic hoses and couplings every operating day. Repair or replace if leakage, cracking, wear or damage is evident. Damaged hoses or couplings can fail, resulting in injury or property damage.
- Use this tool for manufacturer's intended purpose only. Use other than that which is described in this manual can result in injury or property damage.
- Make sure all bystanders are clear of the work area when handling, starting, and operating the tool. Nearby personnel can be injured by flying or falling debris or by flying parts in the event of a tool malfunction.

## ⚠CAUTION

Hydraulic oil can cause skin irritation.

- Handle the tool and hoses with care to prevent skin contact with hydraulic oil.
- In case of accidental skin contact with hydraulic oil, wash the affected area immediately to remove the oil.

Failure to observe these precautions may result in injury.

## IMPORTANT

Emergency stop procedure:

1. Release the trigger.
2. Shut off the hydraulic power source.

## IMPORTANT

Procedure for connecting or disconnecting hydraulic hoses, fittings or components:

1. Move the flow lever on the power source to the OFF position.
2. Stop the hydraulic power source.
3. Follow the sequence under "Hose Connections" to prevent pressure buildup. In case some pressure has built up, loosen hoses, fittings or components slowly.

*Note: Keep decals clean and legible. Replace decals when necessary.*

## Identification

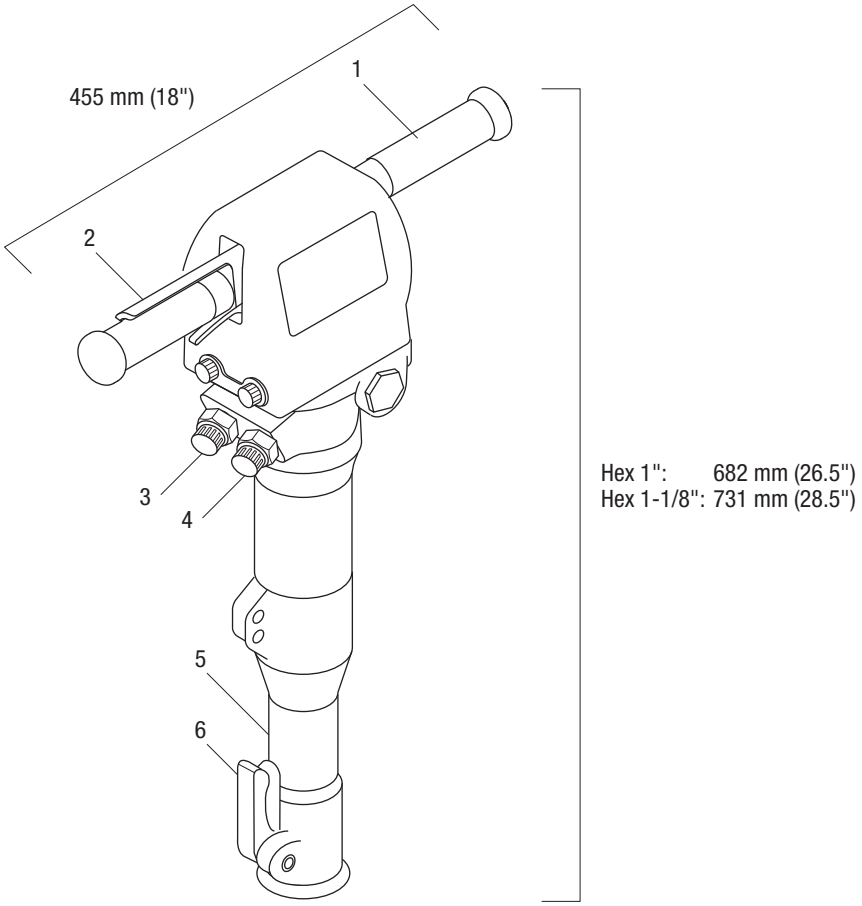


**HPB45 Series Hydraulic Paving Breaker**

1. Handle
2. Trigger
3. Pressure Port
4. Return Port
5. Front End
6. Latch

## Specifications

### HPB45 Series

Type of Hydraulic System..... Open-center

Weight (without hoses and tool)

Hex 1" .....21.8 kg (48 lb)

Hex 1-1/8".....25.0 kg (55 lb)

Steel Size (standard).....Hex 1" x 4-1/4", 1-1/8" x 6"

Working Pressure ..... 105 to 125 bar (1500 to 1800 psi)

Hydraulic Oil
Working Temperature .....30 to 70 °C (86 to 158 °F)

Accumulator Charging
Pressure (nitrogen) ..... 50 bar (723 psi)

Blow Frequency.....22 to 36 Hz (1320 to 2160/min)

Impact Energy .....85 Joule

Hydraulic Port Connections ..... 1/2" BSP

Vibration Level (3 axis)..... a = 4.8 m/s$^2$

Sound Power Level

Guaranteed

Hex 1".....$L_{WA}$ = 109 dB

Hex 1-1/8" .....$L_{WA}$ = 110 dB

Measured

Hex 1".....$L_{WA}$ = 107 dB

Hex 1-1/8" .....$L_{WA}$ = 106 dB

### Hydraulic Power Source

**⚠WARNING**

Do not exceed the following hydraulic power source maximums:

- Hydraulic flow: 30 l/min (8 gpm)
- Pressure relief: 160 bar (2300 psi)
- Back pressure: 28 bar (405 psi)

Failure to observe this warning could result in severe injury or death.

Type of Hydraulic System..... Open-center

Flow

Minimum ..... 18 l/min (5 gpm)

Maximum ..... 30 l/min (8 gpm)

Filtration.....10 micron (nominal)

Pressure Relief Setting ..... 160 bar (2300 psi)

Back Pressure (maximum)..... 28 bar (405 psi)

- Optimal performance occurs at maximum flow.
- Maximum hydraulic fluid temperature must not exceed 70 °C (158 °F). A sufficient oil cooling capacity is needed to limit the hydraulic fluid temperature.
- Hydraulic flow must not exceed 30 l/min (8 gpm). Install a flow meter in the return line to measure the rate of hydraulic flow before using the tool.
- Pressure relief valve setting must not exceed 160 bar (2300 psi) at your tool's maximum flow. Locate the pressure relief valve in the supply circuit to limit excessive hydraulic pressure to the tool.

### Hydraulic Schematic

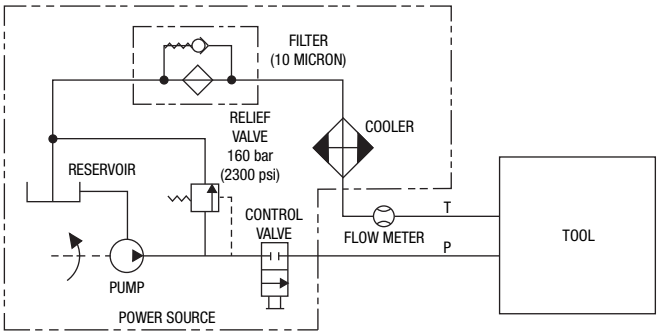

## Specifications (cont'd)

**Recommended Hydraulic Fluid**

Viscosity

Ideal .....20 to 40 cSt

Allowable.....15 to 1000 cSt

Viscosity Index ..... Min. 100

Standard mineral or synthetic oil can be used.

When the tool works continuously, the oil temperature will steady at a certain level called the oil working temperature. Depending on the nature of the job and the cooling capacity of the system, the oil working temperature will be 20 °C to 40 °C (68 °F to 104 °F) above the air temperature. At working temperature, the oil viscosity must be within the ideal area. The tool may not be operated if the oil viscosity is not within the allowable area or if the temperature is not within –20 °C to 70 °C (–4 °F to 158 °F).

The viscosity index expresses the dependence of the viscosity on the temperature. Thus, a high viscosity index is preferable so that the oil can be used within a wide temperature interval.

**Applicable Oil Types**

| TYPE OF OIL | (–4 F) –20 C | (14 F) –10 C | (32 F) 0 C | (50 F) 10 C | (68 F) 20 C | (86 F) 30 C | (104 F) 40 C | (122 F) 50 C | (140 F) 60 C | (158 F) 70 C | Viscosity at 40 C (104 F) |
|---|---|---|---|---|---|---|---|---|---|---|---|
| BP Biohyd 32 | | | | | | | | | | | 36.0 cSt |
| BP Biohyd 46 | | | | | | | | | | | 44.0 cSt |
| BP Biohyd SE 46 | | | | | | | | | | | 46.0 cSt |
| BP Biohyd SE 68 | | | | | | | | | | | 72.2 cSt |
| CASTROL Biotech HTG 32 | | | | | | | | | | | 36.8 cSt |
| MOBIL EAL 224 H | | | | | | | | | | | 36.0 cSt |
| Q8 Holbein 46 | | | | | | | | | | | 48.4 cSt |
| SHELL Naturelle HF | | | | | | | | | | | 35.0 cSt |
| STATOIL M 32-68 | | | | | | | | | | | 47.4 cSt |
| SHELL Tellus oil T46 | | | | | | | | | | | 46.0 cSt |
| ESSO Univis N46 | | | | | | | | | | | 45.7 cSt |
| TEXACO Rando oil HDZ46 | | | | | | | | | | | 51.0 cSt |
| MOBIL DTE 15 | | | | | | | | | | | 44.9 cSt |

Permitted oil temperature

Recommended oil temperature

## Hoses and Fittings

### Installation and Maintenance

Refer to publication 99930323, SAE J1273 (Hose and Hose Assemblies).

### Replacement

Adaptors: Breakers are installed with 1/2" BSP male–1/2" BSP male adaptors.

Hoses: Hoses are produced according to EN 853 with two layers of wire and have a maximum pressure of 275 bar (4000 psi). Hoses are approximately 300 mm (12") long.

Fittings: 1/2" BSP female for connecting to the breaker; 1/2" NPTF male for connecting to quick release couplings.

## Hose Connections

**⚠WARNING**

Do not disconnect tool, hoses or fittings while the power source is running or if the hydraulic fluid is hot. Hot hydraulic fluid could cause serious burns.

### Connecting Hoses

1. Move the flow lever on the hydraulic power source to the OFF position.
2. Stop the hydraulic power source.
3. Connect the return hose to the return port on the hydraulic power source, then to the return port on the tool.
4. Connect the pressure hose to the pressure port on the tool, then to the pressure port on the hydraulic power source.

### Disconnecting Hoses

1. Move the flow lever on the hydraulic power source to the OFF position.
2. Stop the hydraulic power source.
3. Disconnect the pressure hose from the hydraulic power source, then from the tool.
4. Disconnect the return hose from the tool, then from the hydraulic power source.
5. Install dust caps over the ports to prevent contamination.

## Typical Setup

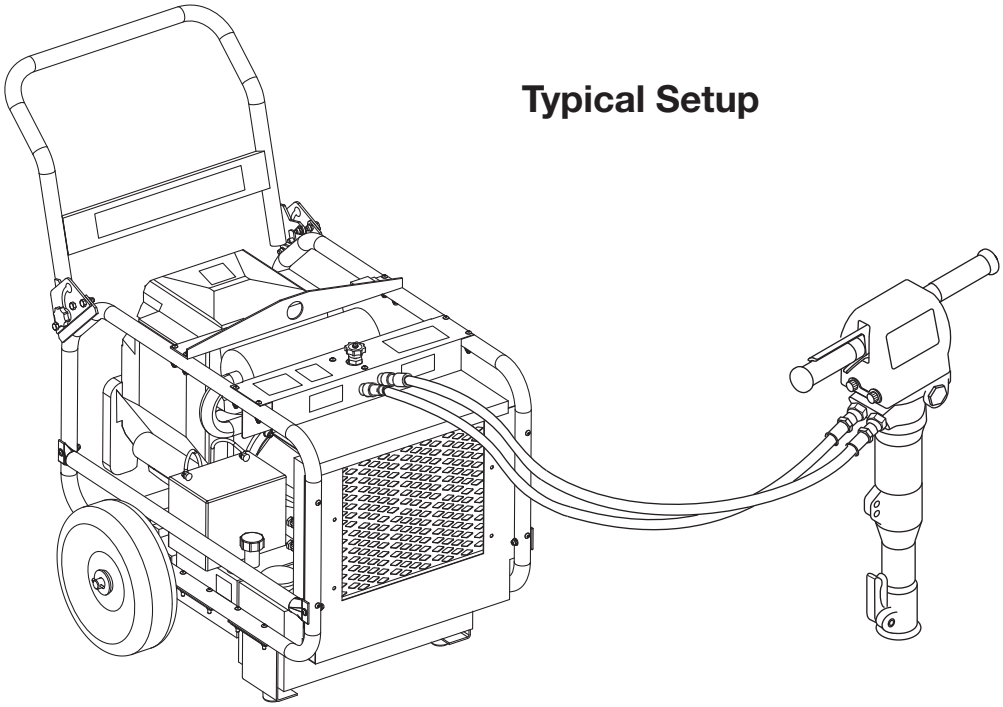

## Setup

**⚠WARNING**

Inspect accessories before use. Discard accessories that have cracks, chips, or gouges.

Failure to observe this warning could result in severe injury or death.

**⚠WARNING**

Do not change accessories, inspect, adjust, or clean tool when it is connected to a power source. Accidental startup can result in serious injury.

Failure to observe this warning could result in severe injury or death.

1. Stop the hydraulic power source.
2. Unlock the latch with a downward motion.
3. Insert the accessory into the front head.
4. Lock the latch with an upward motion.
5. Connect the hydraulic hoses according to the instructions under “Hose Connections.”

## Operation

1. Start the hydraulic power source.

   *Note: Allow the hydraulic power source to run for a few minutes to warm the hydraulic fluid.*
2. Position the bit against the surface (material to be broken, ground rod to be driven, etc.).
3. Grasp both handles firmly.
4. To start the tool, activate the trigger.
5. To stop the tool, release the trigger.
6. When the tool is not in use, stop the hydraulic power source to reduce heat and wear on tool components.

## Maintenance

Use this maintenance schedule to maximize the tool’s service life.

*Note: Keep all decals clean and legible. Replace decals when necessary.*

### Daily

1. Wipe all tool surfaces clean.
2. Inspect the hydraulic hoses and fittings for signs of leaks, cracks, wear, or damage. Replace if necessary.
3. Install dust caps over the hydraulic ports when the tool is disconnected.

### Monthly

Perform a thorough inspection of the hydraulic hoses and fittings as described in publication 99930323, SAE J1273 (Hose and Hose Assemblies).

### Annually

If required by your organization, have the tool inspected by an Greenlee Authorized Service Center.

## Maintenance (cont'd)

### Accumulator Recharging Procedure

**⚠WARNING**

Accumulator is charged with nitrogen under high pressure. This pressure must be unloaded before dismounting.

Failure to observe this warning could result in severe injury or death.

1. Check that the oil inlet of the accumulator is depressurized.
2. Remove the protective cap over the charging screw (9) of the accumulator. The socket head screw must be perfectly clean.
3. Loosen the charging screw on top of the accumulator (maximum of two turns). Totally neutralize the pressure before dismounting the accumulator.
4. Unscrew the accumulator cover (10), take out the diaphragm (11), and check for leakage and damage.
5. Clean, check, and replace damaged or worn parts.
6. Grease the seal faces of the accumulator body (12) and the accumulator cover (10) with silicone.
7. Spray both sides of the diaphragm with silicone. Place the diaphragm with its bead pointing downward so that it fits in the groove of the accumulator body (12).
8. Unscrew the charging screw and replace the seal ring (13).
9. Grease the thread of the accumulator cover (10) with copper grease and tighten to approximately 300 Nm (221 ft-lb).
10. Fasten the charging screw lightly, and loosen it two turns afterward.
11. Mount the filling device on the filling socket of the accumulator cover and fasten it lightly while turning the handle (2) forward and backward, ensuring that the hexagon resiliently fits into the charging screw.
12. Close the bleeder valve (5) by turning it clockwise.
13. Connect the hose (7) to the check valve (6).
14. Connect the free end of the hose directly to the nitrogen bottle by using the reducing nipple.

    *Note: Use only pure nitrogen.*
15. Read the pressure on the gauge (4). Carefully open the valve of the nitrogen bottle (1) and charge with nitrogen until the pressure is approximately 20% higher than required charging pressure. Close the valve of the nitrogen bottle.
16. If the gauge (4) shows too high a nitrogen pressure, loosen the bleeder valve (5) until the required pressure is achieved.
17. Close the charging screw (9) of the accumulator by turning the handle (2) clockwise.
18. Unload the nitrogen hose by opening the bleeder valve (5).
19. Dismount the filling device and check the charging screw (9) for leakage with drops of oil.
20. Fit the protective cap over the accumulator.

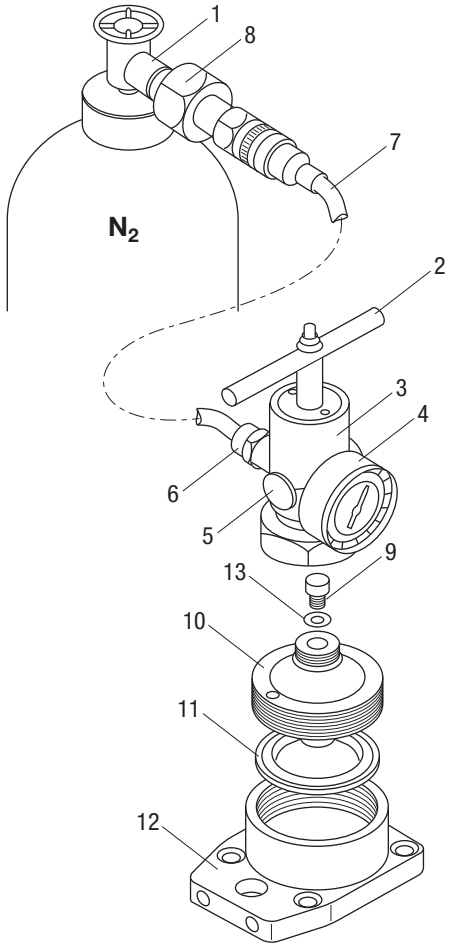


**50027182** **Accumulator filling device** (includes items 2–8)

**50027174** **Accumulator kit (fully charged)** (includes items 9–14)

(1) Valve of nitrogen bottle
(2) Handle
(3) Filling adaptor
(4) Gauge
(5) Bleeder valve
(6) Check valve
(7) Hose, approximately 3 m (10 ft)
(8) Reducing nipple (24.32-14WFG)
(9) Charging screw
(10) Accumulator cover
(11) Diaphragm
(12) Accumulator body
(13) Seal ring
(14) Protective cap (not shown)

## Troubleshooting

Before troubleshooting, determine whether the problem is in the tool, the hoses, or the power source. Substitute a tool, hoses, or power source known to be in good working order to eliminate the item that is not If the problem is in the tool, refer to the troubleshooting table in this manual. If the problem is in the power source, refer to the troubleshooting section of the power source instruction manual.

| Problem | Probable Cause | Probable Remedy |
|---|---|---|
| Tool does not operate. | Improper power source. | Verify that the power source meets the specifications. |
| | Hydraulic fluid level low. | Check the fluid level. Check system for leaks. |
| | Incorrect hydraulic fluid viscosity. | Use hydraulic fluid with the correct viscosity. |
| Tool operates slowly or erratically. | Hydraulic fluid cold. | Allow fluid to warm to the operating temperature. Actuate the tool intermittently to reduce the warming time. |
| | Power source not adjusted correctly. | Refer to the power source operator's manual. Set the flow and pressure to correspond with the tool. |
| | Hydraulic fluid level low. | Check the fluid level. Check system for leaks. |
| | Air in the hydraulic system. | Refer to the power source manufacturer's instructions for removing air from the system. |
| | Incorrect hydraulic fluid viscosity. | Use hydraulic fluid with the correct viscosity. |
| Tool feels hot. | Hydraulic fluid level low. | Check the fluid level. Check for leaks. |
| | Incorrect hydraulic fluid viscosity. | Use hydraulic fluid with the correct viscosity. |
| | Hydraulic fluid dirty. | Refer to the power source owner’s manual for procedure to replace hydraulic oil and filter. |
| Strike rate is normal; blow energy is weak. | Low accumulator gas pressure. | Return tool to a Greenlee Authorized Service Center. |
| | Broken accumulator diaphragm. | Return tool to a Greenlee Authorized Service Center. |

## Illustration—Main

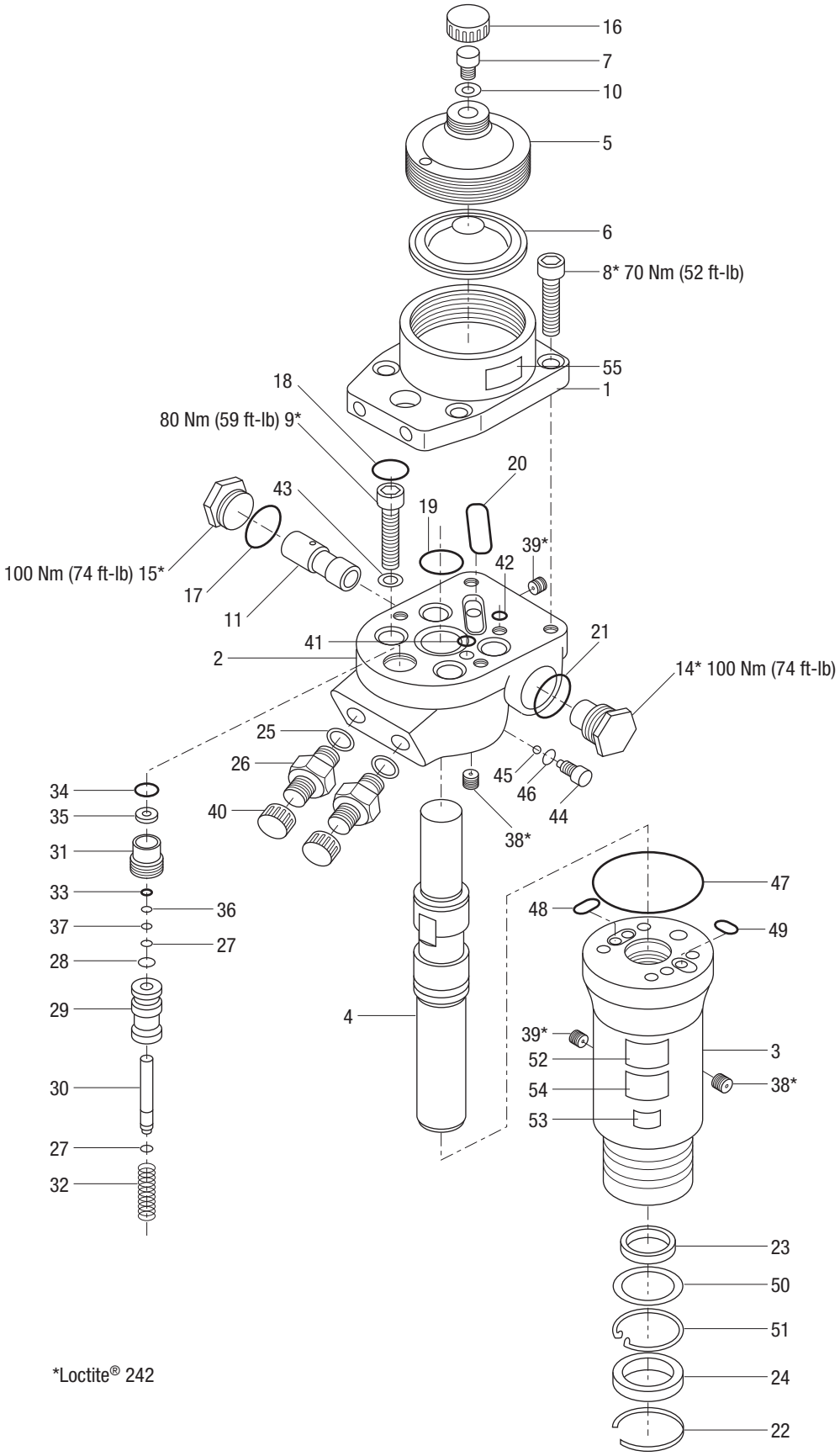

## Parts List—Main

| Key | Part No. | Description | Qty |
|---|---|---|---|
| 1 | 50022083 | Accumulator body | 1 |
| 2 | 52033754 | Valve housing | 1 |
| 3 | 52033755 | Cylinder | 1 |
| 4 | 52033756 | Striking piston | 1 |
| 5 | 50022164 | Accumulator cover | 1 |
| 6 | 50022172 | Diaphragm | 1 |
| 7 | 50022180 | Charging screw | 1 |
| 8 | 50022199 | Screw, M10x30 | 4 |
| 9 | 50022202 | Screw, M10x35 | 4 |
| 10* | | Seal ring, Ø8.7/Ø13x1 | 1 |
| 11 | 52033757 | Spool | 1 |
| 14 | 52033758 | Guide socket | 1 |
| 15 | 50022261 | Spool socket | 1 |
| 16* | | Protective cap, M24x1.5 | 1 |
| 17* | | O-ring, Ø24x1.5 | 1 |
| 18* | | O-ring, Ø18x2 | 4 |
| 19* | | O-ring, Ø30x2 | 1 |
| 20* | | O-ring, Ø32x2 | 1 |
| 21* | | O-ring, Ø25x1.5 | 1 |
| 22* | | Locking ring | 1 |
| 23* | | Seal, Ø32/Ø40x6 | 1 |
| 24* | | Seal, Ø32/Ø45x7/10 | 1 |
| 25* | | Seal ring, 1/2" | 2 |
| 26 | 50022377 | Connector, 1/2" BSP | 2 |
| 27* | | Seeger spring ring | 2 |
| 28* | | Shim PS, 8x14x0.5 | 1 |
| 29 | 50022415 | Trigger spool | 1 |
| 30 | 50022431 | Trigger rod | 1 |
| 31 | 50022458 | Packing gland | 1 |
| 32 | 50022474 | Spring | 1 |

| Key | Part No. | Description | Qty |
|---|---|---|---|
| 33* | | O-ring, Ø8.3x2.4 | 1 |
| 34* | | O-ring, Ø16.3x2.4 | 1 |
| 35* | | Seal, Ø8/Ø14x3.5/5 | 1 |
| 36* | | Backup ring | 1 |
| 37* | | Seeger spring ring | 1 |
| 38 | 50022555 | Fitting, 02 KRG | 6 |
| 39 | 50022563 | Fitting, 04 KRG | 3 |
| 40 | 50022741 | Protective cap, 1/2" BSP | 2 |
| 41* | | O-ring, Ø6x2 | 1 |
| 42* | | O-ring, Ø8x2 | 1 |
| 43 | 50022814 | Backup washer | 4 |
| 44 | 50022822 | Screw | 1 |
| 45 | 50022830 | Check valve ball | 1 |
| 46* | | Seal ring, Ø9/Ø14x1 | 1 |
| 47* | | O-ring, Ø82x1.5 | 1 |
| 48* | | O-ring, Ø16x1.5 | 1 |
| 49* | | O-ring, Ø13x1.5 | 1 |
| 50* | | Backup washer, Ø32.7/45x2.5 | 1 |
| 51* | | Locking ring | 1 |
| 52 | 50109499 | Plate, identification | 1 |
| 53 | 50109529 | Decal, sound level 110 dB (HPB45-1AVS) | 1 |
| | 50027204 | Decal, sound level 109 dB (HPB45-2AVS) | 1 |
| 54 | 50110292 | Decal, weight (HPB45-1AVS) | 1 |
| | 50110284 | Decal, weight (HPB45-2AVS) | 1 |
| 55 | 50110764 | Decal, accumulator | 1 |
| * | 50023101 | Seal kit (includes 10, 16–25, 27, 28, 33–37, 41, 42, 46–51, and 91) | |
| | 50023152 | Trigger valve kit (includes 27–37) | |
| | 52061099 | Whip hose | 2 |

## Illustration and Parts List—Ergo Handle with Cover

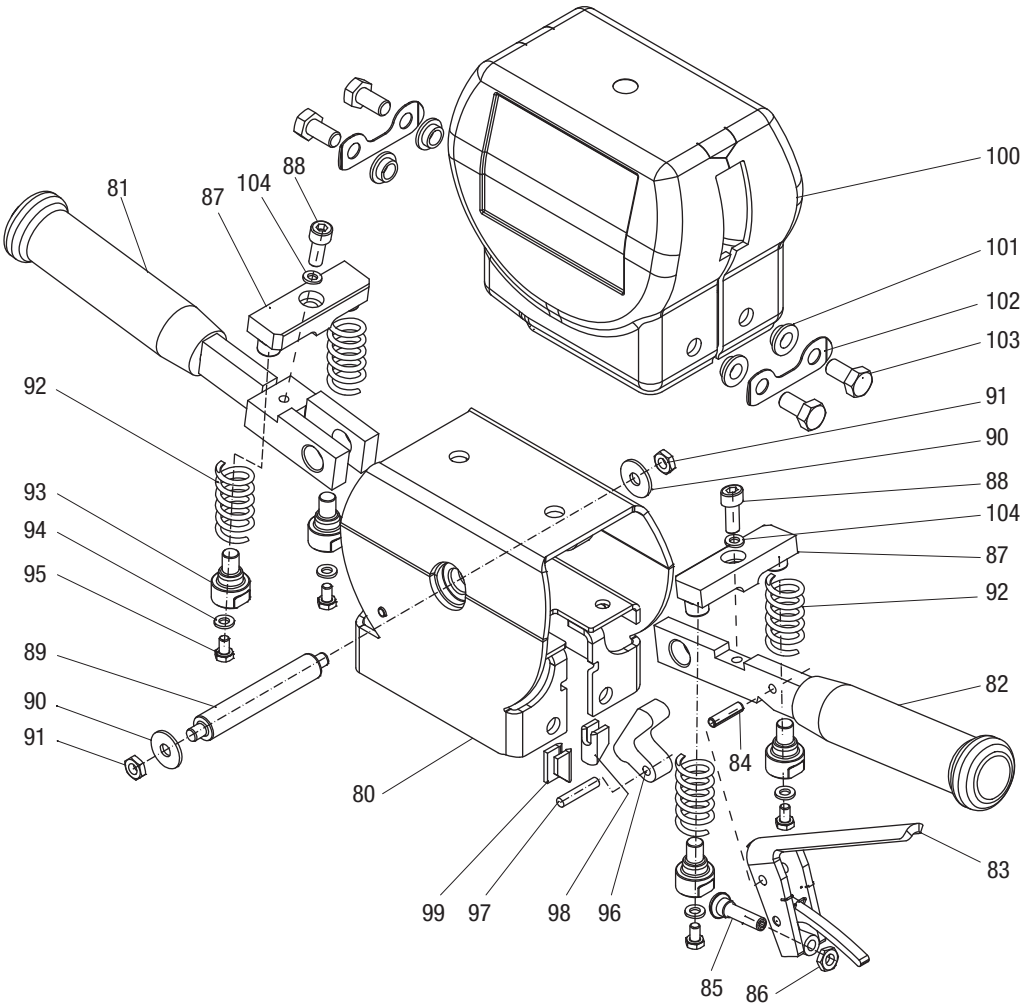


| Key | Part No. | Description | Qty |
|---|---|---|---|
| | 52061077 | E-handle, complete | 1 |
| 80 | | Frame | 1 |
| 81 | | Handle | 1 |
| 82 | | Handle | 1 |
| 83 | | Trigger lever | 1 |
| 84 | | Roll pin, Ø6x24 | 1 |
| 85 | | Thrust pad with M8 screw | 1 |
| 86 | | Nut, M8 | 1 |
| 87 | | Stopper | 2 |
| 88 | | Screw, M5x20 | 2 |
| 89 | | Pin | 1 |
| 90 | | Washer, Ø8 | 2 |
| 91 | | Nut, M8 | 2 |
| 92 | | Spring | 4 |
| 93 | | Spring guide | 4 |
| 94 | | Washer, Ø6 | 4 |
| 95 | | Screw, M6x10 | 4 |
| 96 | | Trigger pawl | 1 |

| Key | Part No. | Description | Qty |
|---|---|---|---|
| 97 | | Pin, Ø6x30 | 1 |
| 98 | | Pin latch, right | 1 |
| 99 | | Pin latch, left | 1 |
| 100 | | Top cover | 1 |
| 101 | | Spacer | 4 |
| 102 | | Nab | 2 |
| 103 | | Screw, M10x25 | 4 |
| 104 | | Lock washer, M5 | 2 |
| 105 | 50463268 | Decal, Greenlee | 2 |
| 106 | 50490095 | Decal, warning | 1 |
| | 52061094 | Ergo handle mounting kit (includes 101–103) | |
| | 52061095 | Handle repair kit (includes 87, 88, 92–95, and 104) | |
| | 52061096 | Trigger pawl repair kit (includes 96–99) | |
| | 52061097 | Handle pivot repair kit (includes 89–91) | |
| | 52061098 | Trigger repair kit (includes 83–86) | |

## Illustration and Parts List—Nose

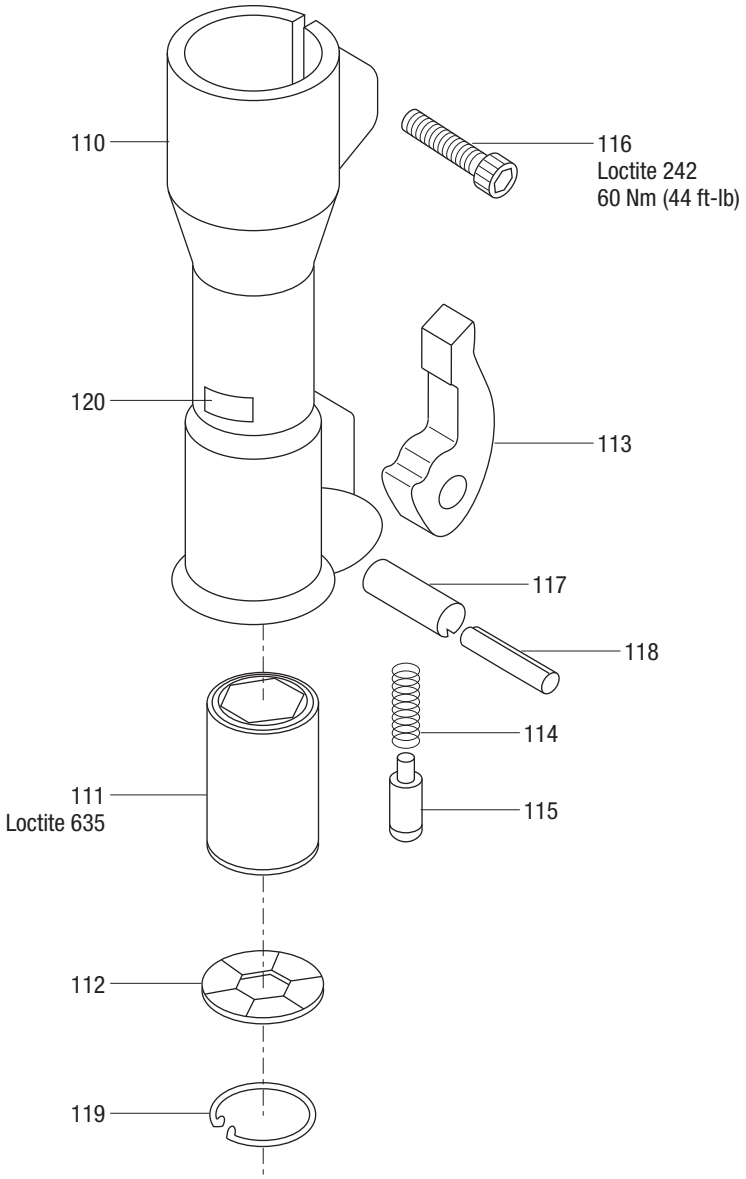


### 1" x 4-1/4" Hex Shank

| Key | Part No. | Description | Qty |
|---|---|---|---|
| 110 | 50023624 | Nose part, hex 1" | 1 |
| 111 | 50023632 | Bushing, hex 1" x 4-1/4" | 1 |
| 112 | 50023675 | Chisel bellows, hex 1" | 1 |
| 113 | 50023705 | Latch | 1 |
| 114 | 50023730 | Spring | 1 |
| 115 | 50023748 | Lock pin | 1 |
| 116 | 50023756 | Screw, M10x55 | 2 |
| 117 | 50023764 | Roll pin, Ø16x50 | 1 |
| 118 | 50023802 | Roll pin, Ø10x50 | 1 |
| 119 | 50023829 | Locking ring, 57x2 | 1 |
| 120 | 50109570 | Decal, hex shank size 1 x 4-1/4 | 1 |

### 1-1/8" x 6" Hex Shank

| Key | Part No. | Description | Qty |
|---|---|---|---|
| 110 | 50023837 | Nose part, hex 1-1/8", 1-1/4" | 1 |
| 111 | 50023918 | Bushing, hex 1-1/8" x 6" | 1 |
| 112 | 50023926 | Chisel bellows, hex 1-1/8" | 1 |
| 113 | 50023705 | Latch | 1 |
| 114 | 50023730 | Spring | 1 |
| 115 | 50023748 | Lock pin | 1 |
| 116 | 50023756 | Screw, M10x55 | 2 |
| 117 | 50023764 | Roll pin, Ø16x50 | 1 |
| 118 | 50023802 | Roll pin, Ø10x50 | 1 |
| 119 | 50023829 | Locking ring, 57x2 | 1 |
| 120 | 50109561 | Decal, hex shank size 1-1/8 x 6 | 1 |

## Accessories

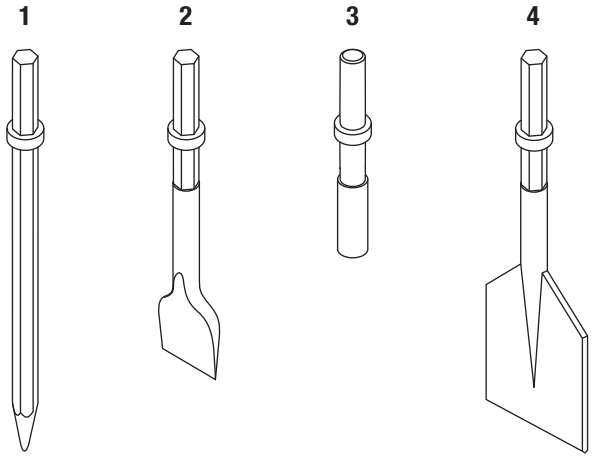


### Accessories with 1" x 4-1/4" Hex Shank

| Key | UPC No. 78-3310- | Part No. | Description | Qty |
|---|---|---|---|---|
| 1 | 49138G | 50491385 | Moil point, 14" | 1 |
| 2 | 46219 | 50462199 | Chisel bit, 3" x 14" | 1 |
| 3 | 46222 | 50462229 | Rod driver (for 5/8" maximum diameter ground rod) | 1 |
| | 46223 | 50462237 | Rod driver (for 1" maximum diameter ground rod) | 1 |
| 4 | 46221 | 50462210 | Asphalt cutter | 1 |

### Accessories with 1-1/8" x 6" Hex Shank

| Key | UPC No. 78-3310- | Part No. | Description | Qty |
|---|---|---|---|---|
| 1 | 41706 | 50417062 | Moil point, 14" | 1 |
| 2 | 41707 | 50417071 | Chisel bit, 3" x 14" | 1 |
| 4 | 41708 | 52000031 | Asphalt cutter, 5" x 11" | 1 |

4455 Boeing Drive • Rockford, IL 61109-2988 • USA • 815-397-7070


**USA** Tel: 800-435-0786
Fax: 800-451-2632

**Canada** Tel: 800-435-0786
Fax: 800-524-2853

**International** Tel: +1-815-397-7070
Fax: +1-815-397-9247

**www.greenlee.com**